TECHNICAL SPECIFICATIONS

BETA ENERJİ VE TEKNOLOJİ ANONİM ŞİRKETİ
Acidereosb Mah. Çanakkale Cad. No: 11
Sarıçam / ADANA - Tel: 444 21 01
Faks:0 322 394 42 53 - Mersis No: 0391115623900001
Yüreğir V.D. 859 115 6239

BSA.24.211	CAST RESIN TRANSFORMER	Elc. Eng. Mehmet DÜVERLİOĞLU	22.02.2024

ELECTRICAL DATA		
Standards:	IEC 60076-11	
Service:	Distribution	
Rated Power	12000	kVA
Primary Side:		
Rated Voltage	6,3	kV
Voltage Tappings	± 2 x 2.5%	
Rated Current	1099,71	A
Connection	Star + N	
Secondary Side:		
Rated Voltage	10,5	kV
Rated Current	659,83	A
Connection	Delta	
No Load Loss	13000	W
Load Loss at 120°C	50000	W
Short Circuit Impedance at 120°C (±IEC tolerances)	10	%
Sound Pressure Level	70	dB
Partially Discharge Level	≤10	pC
Number of Phase	3	
Frequency	50	Hz
Vector Group	YNd11	
Insulating Class (Primary/Secondary)	F/F	
Maximum Temperature Rise of Windings	100	K
Cooling Method	AN	
Conductor Material (Primary/Secondary)	AL/AL	
Insulation Level of Primary Side	7,2/20/60	kV
Insulation Level of Secondary Side	12/28/75	kV
Classes:		
Climatic	C2	
Environmental	E2	
Fire	F1	
Altitude	1000	m
Location	Indoor	
Enclosure		
Protection Class	IP00	
Material	-	
Thickness of Steel Sheet	-	
Thickness of Coating	-	
Colour	-	
Enclosure Weight	-	

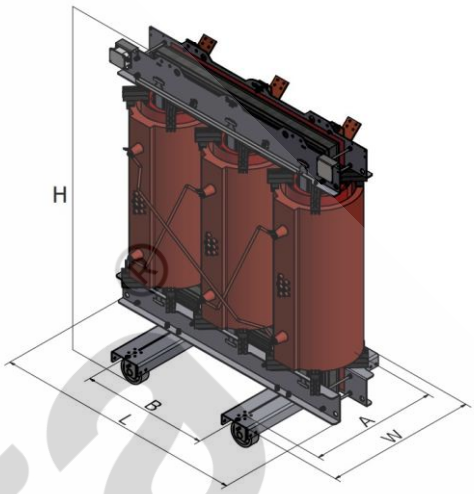

DIMENSIONS			
Length	L	3324	mm
Width	W	1750	mm
Height	H	2910	mm
Wheels Center	AxB	1070x1070	mm
Wheels Diameter		200	mm
Transformer Weight		18000	kg
Total Weight		18000	kg

*Dimensions and weight are ±10% toleranced.

INCLUDED ACCESSORIES

- PT100 temperature sensors
- PT100 distribution box IP55
- Temperature Controller Relay
- Wheels (Adjustable in two ways)
- Rating Plate
- Earthing terminal
- Eyebolts for horizantal moving
- Lifting Lugs
- Use and Maintenance Manuel
- Routine Test Report

Technical Remarks: Tolerance and tests according to IEC 60076 (if not otherwise indicated)
Dimensions and weight are approximate and will be confirmed after PO
Warranty referred at nominal power rating and nominal voltage ratio (the highest in case of double primary voltages)
Sound pressure level referred at 1000 mm with AN and +3 dB tolerance