EUROPEAN
COMMISSION

Brussels, 28.5.2026
SWD(2026) 133 final

COMMISSION STAFF WORKING DOCUMENT

Accompanying the document

Proposal for a
COUNCIL DECISION

on the position to be taken on behalf of the European Union in the Council of Members of the International Olive Council as regards the organoleptic assessment method for virgin olive oil

{COM(2026) 254 final}

DRAFT DECISION No DEC-III.X/123-VI/2026

REVISING THE ORGANOLEPTIC ASSESSMENT METHOD FOR VIRGIN OLIVE OIL

DECISION DEC-III.X/123-VI/2026

REVISING THE ORGANOLEPTIC ASSESSMENT METHOD

FOR VIRGIN OLIVE OIL

THE COUNCIL OF MEMBERS OF THE INTERNATIONAL OLIVE COUNCIL

Having regard to the International Agreement on Olive Oil and Table Olives, 2015, and in particular its Article 1 "Objectives of the Agreement" concerning standardisation and research into the harmonisation of national and international legislation and its Chapter VI "Standardisation provisions";

Having regard to Resolution RES-5/56-IV/87 of 18 June 1987 adopting IOC document COI/T.20/Doc. No. 5 "Glass for oil tasting" and to Decision DEC-III.2/111-VI/2020 revising document COI/T.20/Doc. No. 5/Rev. 2;

Having regard to the recommendation made by the Committee on Chemistry and Standardisation at its 18th meeting, within the framework of the 123rd session of the Council of Members;

Considering the unanimous position formulated by the organoleptic assessment experts at their meeting on 5 and 6 May 2026,

Decides

1. To revise document COI/T.20/Doc. No. 5/Rev. 2 "Glass for oil tasting". Document COI/T.20/Doc. No. 5/Rev. 3 replaces and repeals method COI/T.20/Doc. No. 5/Rev. 2.

Madrid, ** June 2026

Tawfik EL ACHCHABI

Président du Conseil oléicole international

Príncipe de Vergara, 154 - 28002 Madrid - Spain
Tel: +34 915 903 638
E-Mail: iooc@internationaloliveoil.org
Internationaloliveoil.org

INTERNATIONAL

OLIVE

COUNCIL

COI/T.20/Doc. No 5/Rev. ~~2~~ 3
~~2020~~ Juin 2026

ENGLISH
Original: SPANISH

Príncipe de Vergara, 154 – 28002 Madrid – Spain Tel.: +34 915 903 638 Fax: +34 915 631 263 - e-mail: iooc@internationaloliveoil.org - http://www.internationaloliveoil.org/

STANDARD FOR THE SENSORY ANALYSIS OF OLIVE OIL ~~STANDARD~~

GLASS FOR OIL TASTING

1. PURPOSE

The purpose of this standard is to describe the characteristics of the glass intended for use in the organoleptic analysis of edible oils (odour, taste, flavour).

In addition, it describes the adapted heating unit needed to reach and maintain the right temperature for this analysis.

2. DESCRIPTION OF THE GLASS

The drawing in Figure 1 attempts to establish the optimum characteristics desirable in a piece of apparatus of this kind, which can be specified as follows:

a) Maximum steadiness, to prevent the glass from tilting and the oil from being spilled.

b) A base which easily fits the indentations of the heating unit so that the bottom of the glass is evenly heated.

c) A narrow mouth which helps to concentrate the odours and facilitates their identification.

d) Made of dark-coloured glass to prevent the taster from perceiving the colour of the oil, thus eliminating any prejudices and impeding the possible formation of biases or tendencies that might affect the objectiveness of the determination.

2.1. Dimensions

The glass is sketched in Figure 1, and has the following dimensions:

Total capacity.....	130 ml + 10 ml
Total height.....	60 mm + ~~1~~ 2 mm
Diameter of mouth..... (measured at the outer edge of the rim)	50 mm + ~~1~~ 2 mm
Diameter of glass at its widest.....	70 mm + ~~1~~ 2 mm
Base diameter.. 35 mm + ~~1~~ 2 mm	
Thickness of glass on sides.....	1.5 mm ± 0.2mm
Thickness of glass base	5 mm + 1 mm

Each glass shall be equipped with a watch-glass, the diameter of which shall be 10°mm larger than the mouth of the glass. This watch-glass shall be used as a cover to prevent the loss of aroma and the entry of dust.

Alternatively, it is allowed to use food-grade, odourless, disposable lids made of cardboard, paper or other ecological materials.

~~Each glass shall be equipped with a watch-glass, the diameter of which shall be 10 mm larger than the mouth of the glass. This watch-glass shall be used as a cover to prevent the loss of aroma and the entry of dust.~~ Each batch of glasses must be checked to ensure it conforms to the specified parameters. This verification should be carried out using instruments such as graduated cylinders, rulers, and callipers to measure volume capacity, diameters, heights, and thicknesses.

2.2. Manufacturing characteristics

The glass shall be made of resistant glass; it shall be dark-coloured so that the colour of its contents cannot be discerned, and it shall be free from scratches or bubbles.

The rim shall be even, smooth and flanged.

The glass shall be annealed so that it stands the temperature changes it has to undergo in the tests.

2.3. Instructions for use

The glasses shall be cleaned using unperfumed soap or detergent and shall then be rinsed repeatedly until the cleaning agent has been totally eliminated. The final rinse shall be with drinking water, after which the glasses shall be left to drain and then dried in an odour-free environment.

Neither concentrated acids nor chromic acid mixtures shall be used.

The glasses shall be stored in a cabinet, protecting them from contamination from any extraneous odours.

~~Before use, each glass shall be smelled to ensure that no extraneous odour is present.~~ Once the glasses have been properly washed and dried, it is recommended to periodically select two at random to check for any residual odours.

When the test is being prepared care shall be taken to record the code of each glass and the oil it contains. Only the person in charge of the test will know to which code the oil corresponds.

3. DEVICE FOR HEATING SAMPLES

The samples shall be organoleptically examined at a set temperature which, in the case of edible oils, shall be 28 ± 2 ºC. For this purpose, a heating device (see Figure 2) shall be installed in each booth within the taster's reach. ~~It comprises an aluminium block immersed in a thermostatically-controlled water bath so as to keep a uniform temperature.~~ This block has a series of indentations into which fit the bottoms of the glasses. The temperature difference between the heating device and the oil contained in the glasses inserted in the indentations of the various blocks shall not be more than ± 2 ºC.

Fig. 1

TASTING GLASS

(dimensions in millimetres)

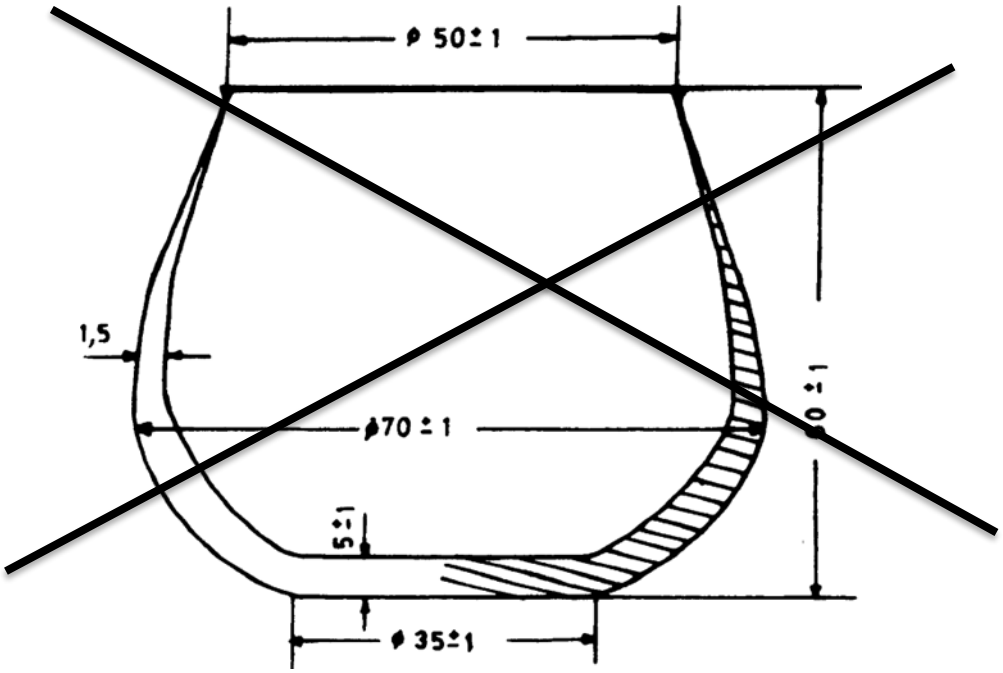

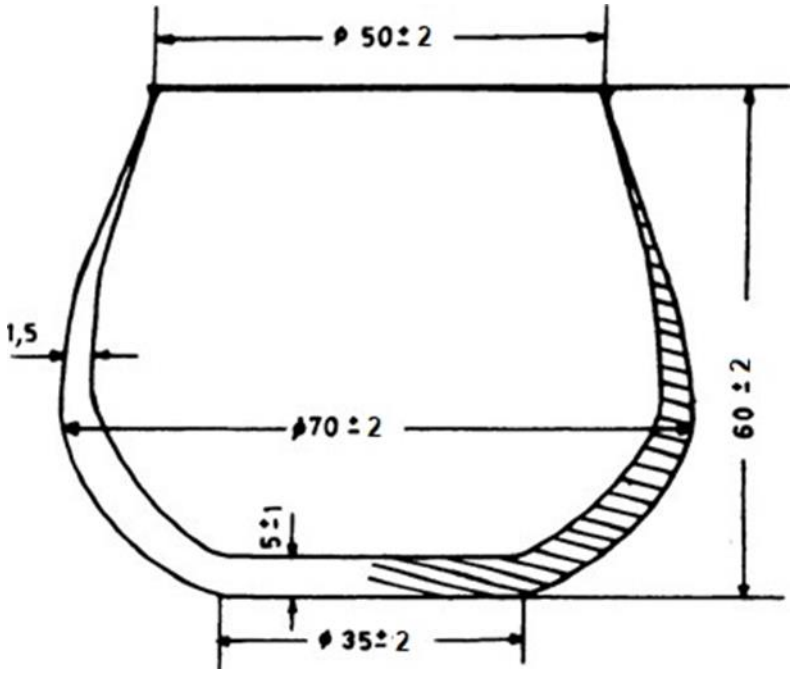

Fig. 2

EXAMPLE OF DEVICE FOR HEATING SAMPLES

(dimensions in millimetres)

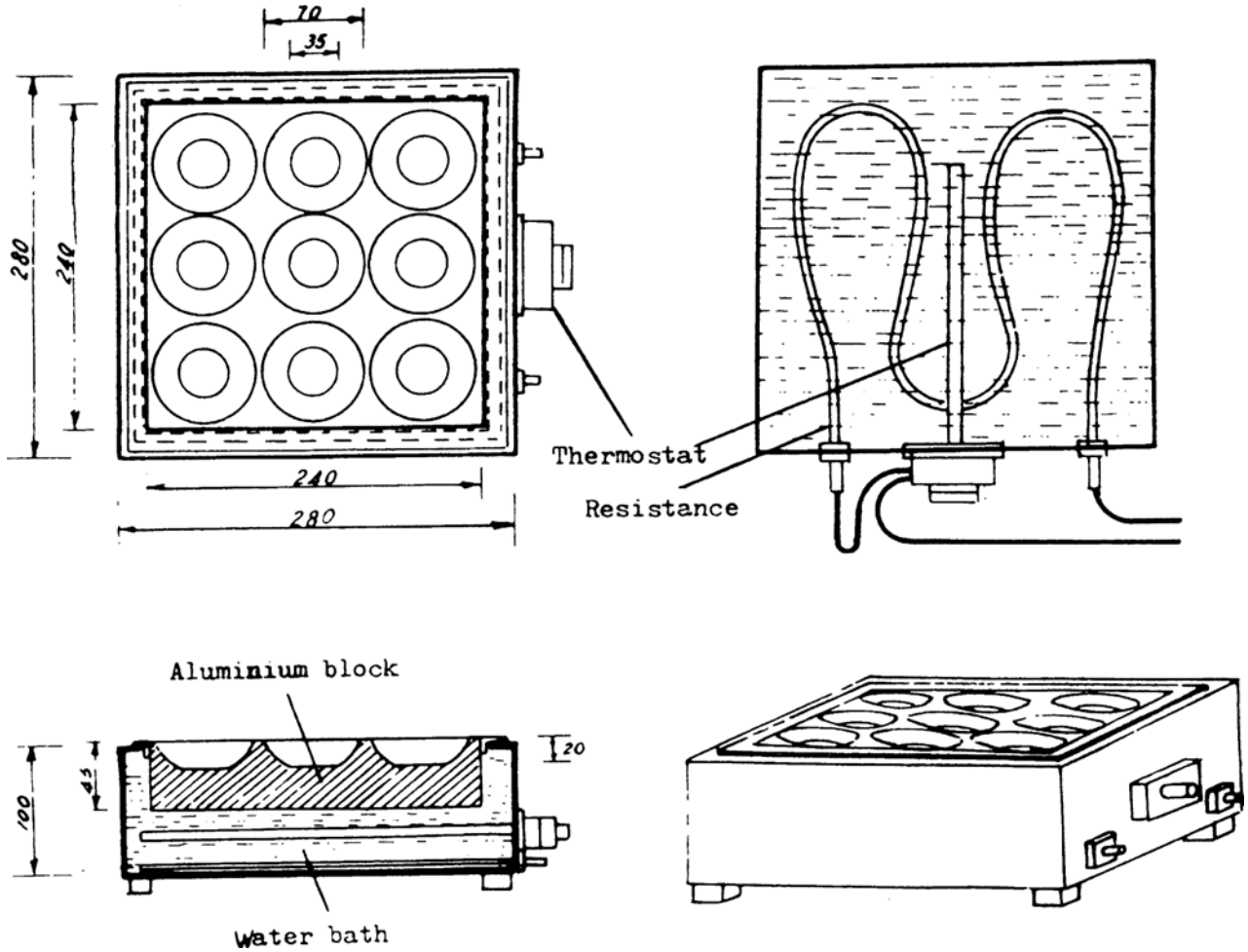

Fig. 2: This figure shows a 3X3 heating unit. Note that other heating units (e.g. 2X2, 2X3), equipped with a thermostat and with or without a water bath can also be used.

DRAFT DECISION DEC-III.X/123-VI/2026

REVISING THE ORGANOLEPTIC ASSESSMENT METHOD FOR VIRGIN OLIVE OIL

DECISION NO DEC-III.X/123-VI/2026

REVISING THE ORGANOLEPTIC ASSESSMENT METHOD FOR VIRGIN OLIVE OIL

THE COUNCIL OF MEMBERS OF THE INTERNATIONAL OLIVE COUNCIL

Having regard to the International Agreement on Olive Oil and Table Olives, 2015, and in particular its Article 1 "Objectives of the Agreement" concerning standardisation and research into the harmonisation of national and international legislation and its Chapter VI "Standardisation provisions";

Having regard to Resolution RES-5/56-IV/87 of 18 June 1987 adopting IOC document COI/T.20/Doc. No. 6 "Guide for the installation of a taste room" and Decision DEC-21/95-V/2007 revising document COI/T.20/Doc. No. 6/Rev. 1;
Having regard to the recommendation made by the Committee on Chemistry and Standardisation at its 18th meeting, within the framework of the 123rd Session of the Council of Members;
Considering the unanimous position formulated by the organoleptic assessment experts at their meeting on 5 and 6 May 2026,

Decides

To revise document COI/T.20/Doc. No. 6/Rev. 1. "Guide for the installation of a taste room". Document COI/T.20/Doc. No. 6/Rev. 2 replaces and repeals document COI/T.20/Doc. No. 6/Rev. 1.

Madrid, ** June 2026
Tawfik EL ACHCHABI
Président du Conseil oléicole international

Príncipe de Vergara, 154 - 28002 Madrid - Spain
Tel: +34 915 903 638
E-Mail: iooc@internationaloliveoil.org
Internationaloliveoil.org

INTERNATIONAL OLIVE COUNCIL

COI/T.20/Doc. No 6/Rev.~~1~~ 2

~~September 2007~~ June 2026

ENGLISH
Original: SPANISH

Príncipe de Vergara, 154 – 28002 Madrid – España Telef.: +34 915 903 638 Fax: +34 915 631 263 - e-mail: iooc@internationaloliveoil.org - http://www.internationaloliveoil.org/

SENSORY ANALYSIS OF OLIVE OIL

STANDARD

GUIDE FOR THE INSTALLATION OF A TEST ROOM

1. INTRODUCTION

The test room is designed to provide the panel participating in the sensory tests with a suitable, comfortable, standardised environment which facilitates work and helps to improve the repeatability and reproducibility of the results.

2. PURPOSE

The purpose of this standard is to specify the basic conditions that have to be met when installing a test room.

3. GENERAL SPECIFICATIONS FOR INSTALLATION

The premises, however large they are, shall meet the following specifications:

They shall be pleasant and suitably lighted but neutral in style. For this purpose, a soothing, plain, light colour is recommended for the walls so that a relaxed atmosphere is created 1/.

The premises shall be such that they are easily cleaned and shall be separated from any source of noise; consequently, they shall preferably be sound-proofed. They shall also be kept free from extraneous odours for which purpose, if possible, they shall be fitted with an effective ventilation device. If the fluctuations in ambient temperature so warrant, the test room shall be equipped with air conditioning to keep the atmosphere close to 20-~~25~~ 28ºC.

All premises must be maintained in accordance with the Organisation's safety standards, which includes all cleaning and hygiene operations for all surfaces (cabins, seats, sinks, cupboards, refrigerators, floors, computer keyboards and mice, where applicable), based on a schedule determined by the type of surfaces to be treated.

1/ The colour scheme of the room and its lighting can affect the results of the sensory analysis.

3.1. Dimensions

The dimensions of the premises often depend upon the possibilities of the laboratories or companies. Generally, they should be sufficiently spacious to permit the installation of ten booths and an area for preparing the samples.

However, it is obvious that the larger the area set aside for the installations, the better, since auxiliary areas can then be provided, for instance, for cleaning apparatus, arranging food preparations and assembling open panels.

3.2. Lighting

General lighting, whether from sunlight or lamps (for instance, strip lighting) shall be uniform, controllable and diffuse.

3.3. Temperature

The premises shall be kept constantly at a temperature of 20-~~25~~ 28ºC.

4. DESCRIPTION OF BOOTHS

4.1. General characteristics

The sensory analysis booths shall be placed alongside each other in the premises. They shall be identical and shall be separated by partitions which shall be sufficiently high and wide as to isolate the tasters when seated.

The booths may be made of any appropriate material which is easily cleaned and looked after (for instance, wood, vitrified plywood, laminated panelling, etc). If paint is used, it must be completely odour-free when dry.

The seats provided in the booths shall be comfortable and shall have an adjustable height device.

Each booth shall also be provided with individual lighting, the direction and intensity of which may be adjusted.

It is highly recommended that the booths be equipped with a button connected to an outside light which enables the taster to make known to the attendant outside that he or she has finished the test, requires further samples, is missing a piece of apparatus, has noticed some irregularity, or wishes information, etc. without distracting the other tasters.

4.2. Dimensions

The booths shall be sufficiently large and comfortable. In general, they shall have the following dimensions:

Width: 0.75 m (without sink)
0.85 m (with sink)

Length: 0.50 m (table)
0.20 m excess for partition

Height of partitions:

0.60 m minimum from table

Height of table:

0.75 m.

4.3. Arrangement

The table surface shall be such that it is easily cleaned.

Part of this surface shall be used for a sink provided with running, drinking water. However, if this is not practicable, this space may be used for a tray, spittoon or similar piece of equipment.

When the samples have to be kept during the test at a constant temperature that is above or below ambient temperature, it is advisable to have a suitable device for this purpose (bain- marie, hot plate, etc.).

A shelf may also be set up at a height of approximately 1.10 metres from the floor for placing various accessories (glasses, small apparatus, etc.).

If the arrangement of the booths in the test room so permits, it is worthwhile installing a device to facilitate the presentation of the samples. This may be in the form of a sliding hatch (Figure 1), a revolving vertical device (Figure 2) suitable for glasses or cups (tall containers), or a horizontally-opening hatch when the containers in which the samples are kept are small (Figure 3). It is simply a question of ensuring that the opening is large enough for the trays and glasses containing the samples to pass through.

5. ADDITIONAL PREMISES

If there is sufficient space, it is advisable to provide separate premises for preparing the samples (test kitchen if culinary or other tests are planned), shelves for arranging glasses or apparatus and rooms for holding discussions prior to or after the tests. If available, such premises shall be kept clean; in no way shall any smells, noise or conversations from these premises disturb the work of the assessors in the test room.

See Figure 4 for an example of a test room and additional premises.

Notes:

Ideal conditions are described. However, if it were not possible to have such an installation solely for sensory analyses, the tests could be performed in premises that meet the minimum conditions described (lighting, temperature, noise, odours) by setting up mobile booths made up of folding elements in such a way that, at the very least, they isolate the tasters from each other.

Security, cleaning and hygiene procedures must always be followed.

Fig. 1

ARRANGEMENT OF THE BOOTH

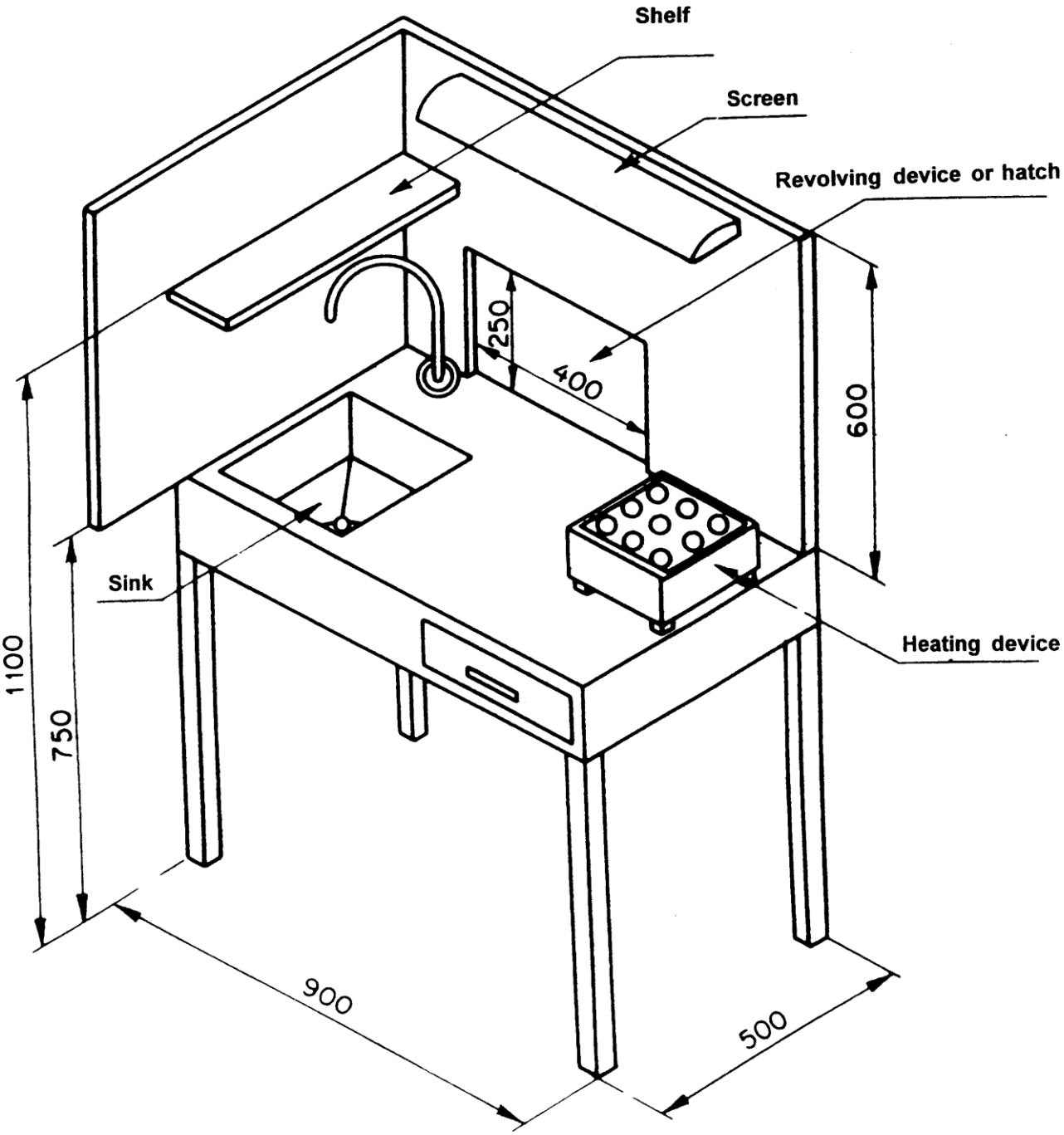

Fig. 2

REVOLVING DEVICE FOR PRESENTING SAMPLES

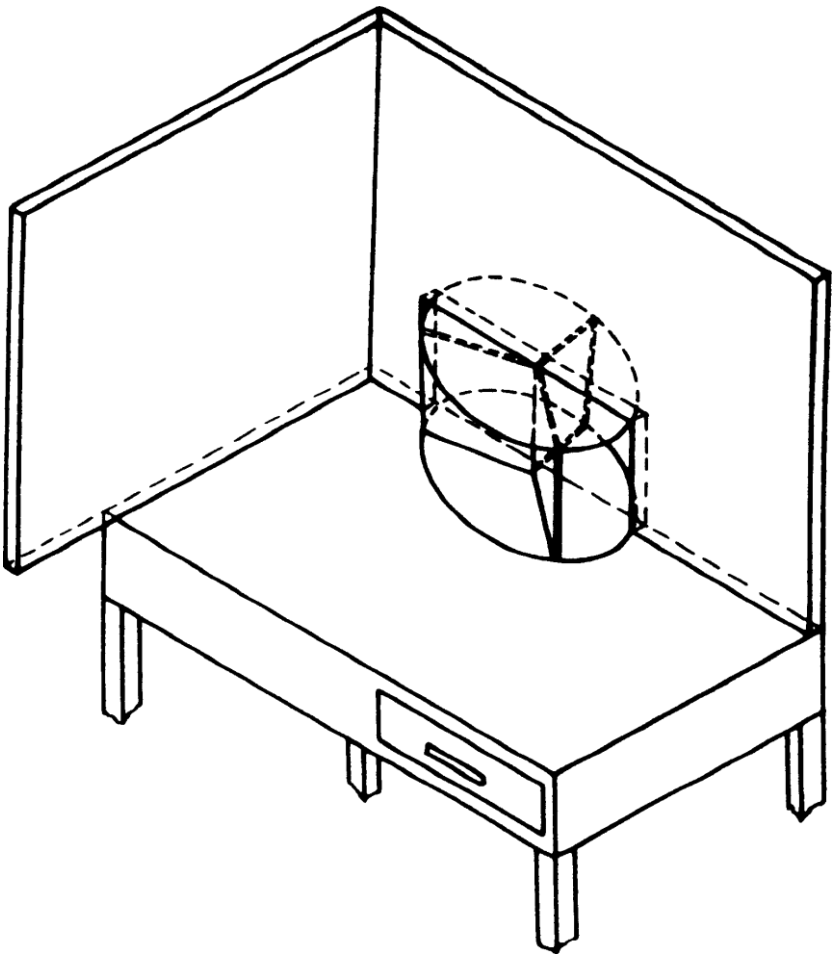

Fig. 3

HATCH FOR PRESENTING SAMPLES

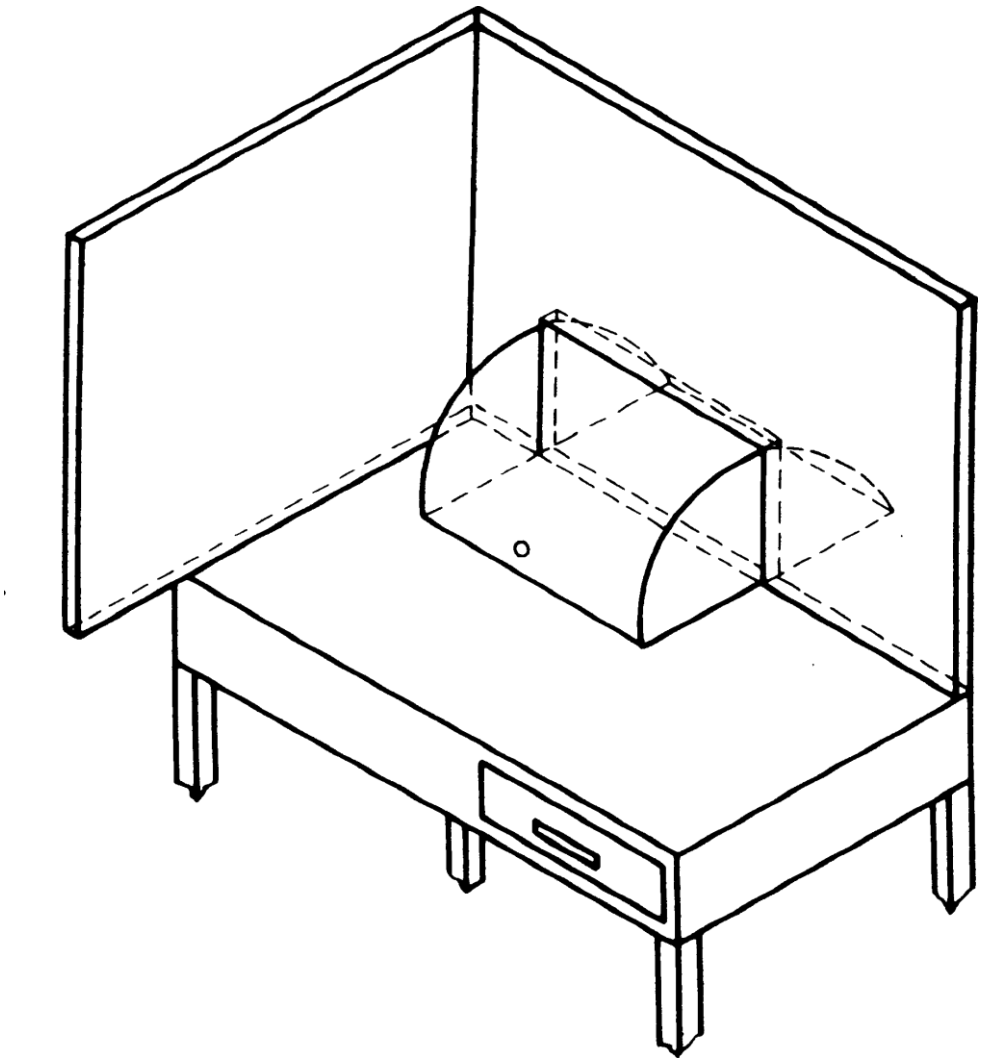

Fig. 4

EXAMPLE OF A TEST ROOM

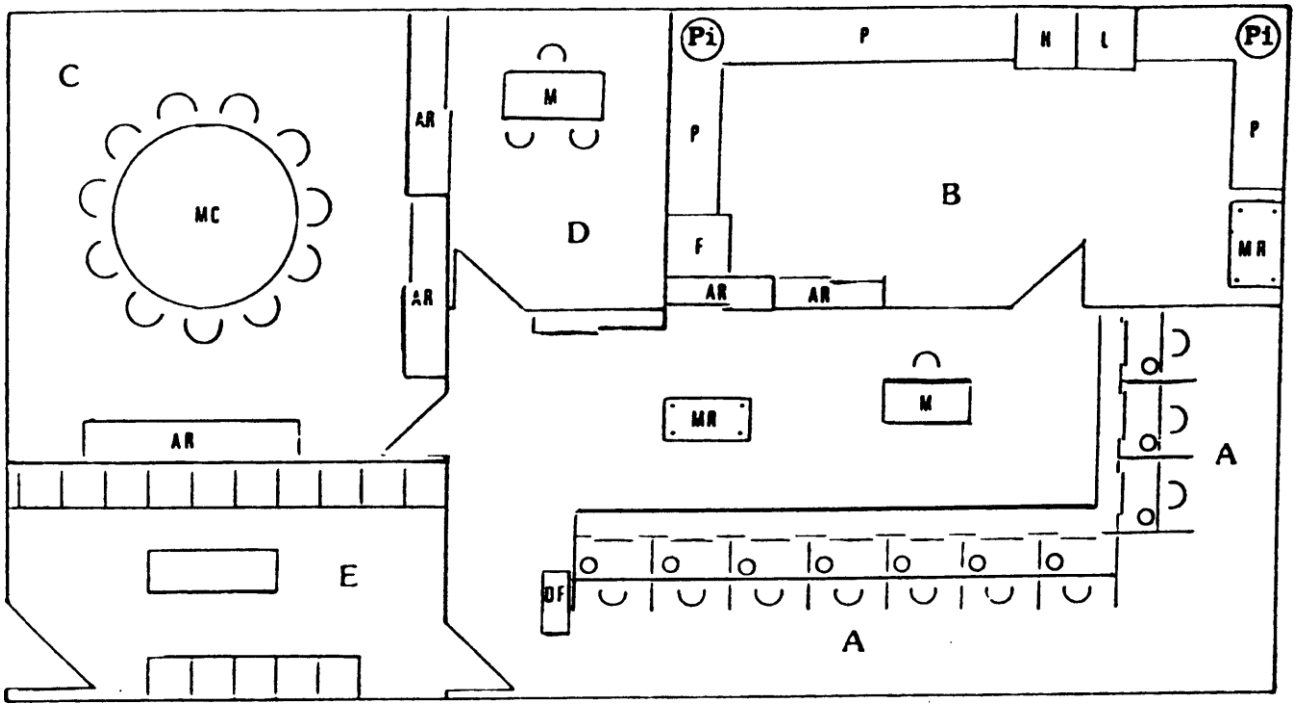

A - Tasting booths.
B - Room for cleaning apparatus and preparing samples
C - Open panel
D - Office
E - Waiting room
F - Refrigerator
H - Oven
L - Dishwasher
M - Table
P - Work surface
Pi - Sink
Ar - Cupboard
Mr - Trolley
Df - Distribution of forms
Mc - Round table